SCALE 1 : 5

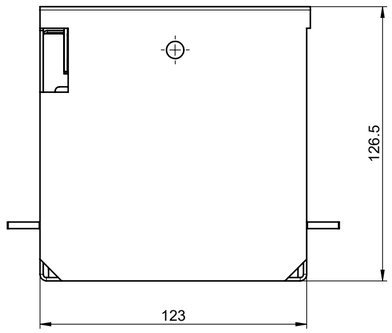

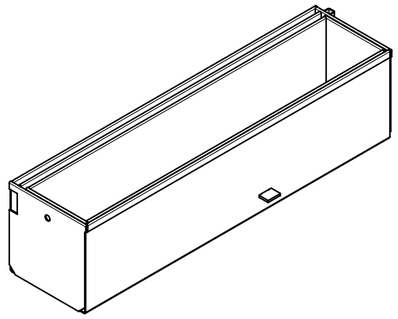

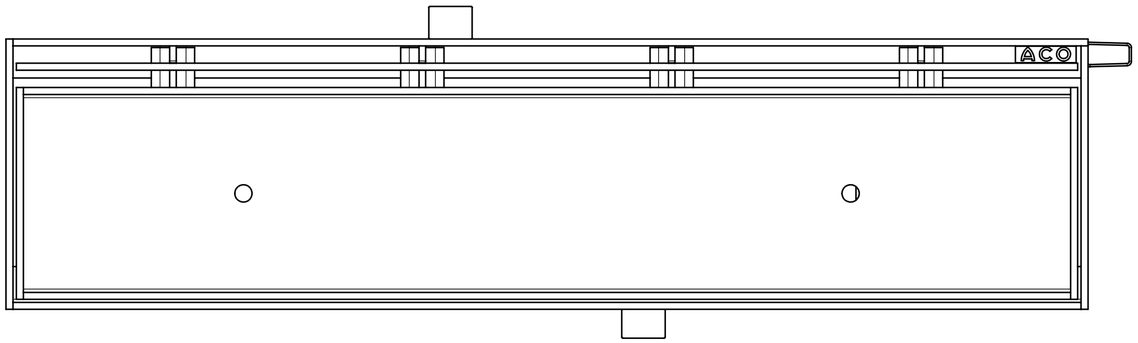

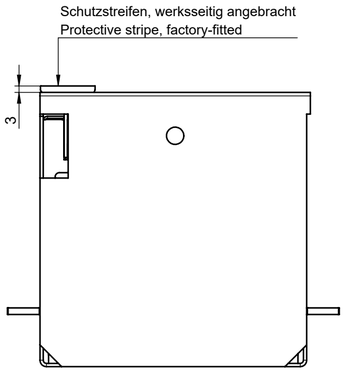

local article number: 445940

ACO Tiefbau
Vertrieb GmbH
24755 Rendsburg, Postfach 320
Tel. 04331 / 354-500
Fax. 04331 / 354-358
www.aco.com

created by: rbhatia	reviewed by: rbhatia	drawing-no.: **1068706-M**	index: **002**
projection:ISO-E	scale: 1:2	documenttype: marketing drw.	

title:

ACO SlotTop
SlotTop AU V100 H105 C250 double slot 8mm L0.5m, Stainless steel
Schlitzrahmen AU V100 H105 C250 Doppelschlitz 8mm L0.5m, Edelstahl

The reproduction, distribution and utilization of this document as well as the communication of its contents to others without express authorization is prohibited. Offenders will be held liable for the payment of damages. All rights reserved in the event of the grant of a patent, utility model or design. Observe copyright by ISO 16016

release date: 15-Nov-2018 16:15

sheet: 1/1

Solidworks 2014 - SW-XZ - Version 1.0